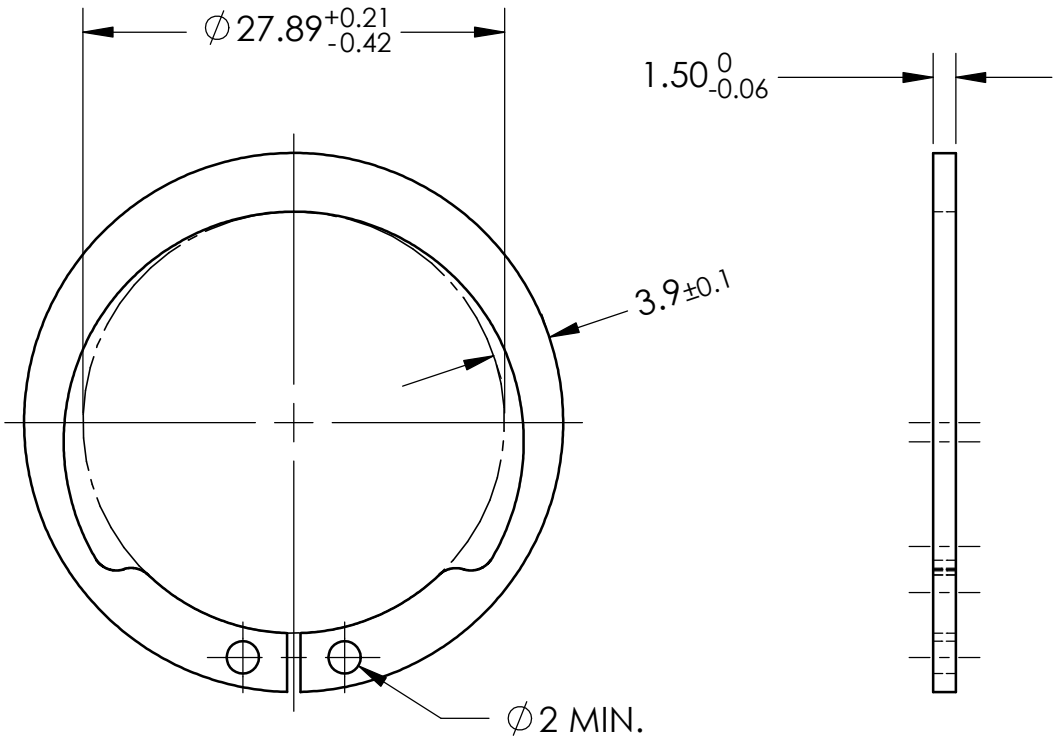

SHAFT DIAMETER : 30
GROOVE DIAMETER : 28.6 $^{+0.00}_{-0.21}$
GROOVE WIDTH : 1.6 MIN.
MATERIAL : DIN 17222/DIN EN10132-4
Ck 75 / C75S
HARDNESS : 47-52 HRC

REV. NO.	DATE	REV. BY	ECN NUMBER

REVISION
WARNING: IF PRINTED, IT IS THE USERS RESPONSIBILITY TO CHECK THAT THIS DOCUMENT REFLECTS THE LATEST REVISION LEVEL.

ALL DIMENSIONS IN MILLIMETERS

MATERIAL	HEAT TREAT	FINISH	QTY. REQ'D.
			1

THE CONTENTS OF THIS DRAWING ARE THE PROPERTY OF ROTOR CLIP CO. INC. AND SHALL BE RETURNED TO ROTOR CLIP CO. INC. UPON REQUEST. ANY UNAUTHORIZED DISCLOSURE OF ITS CONTENTS WITHOUT THE PERMISSION OF ROTOR CLIP CO. INC. IS PROHIBITED.

ROTOR CLIP CO., INC. ®

CUSTOMER DRAWING
DSI-30

SCALE	DRAWN BY	DATE
1:1		1/24/11

DWG. SIZE	DWG. NO.
A	DSI-30-2