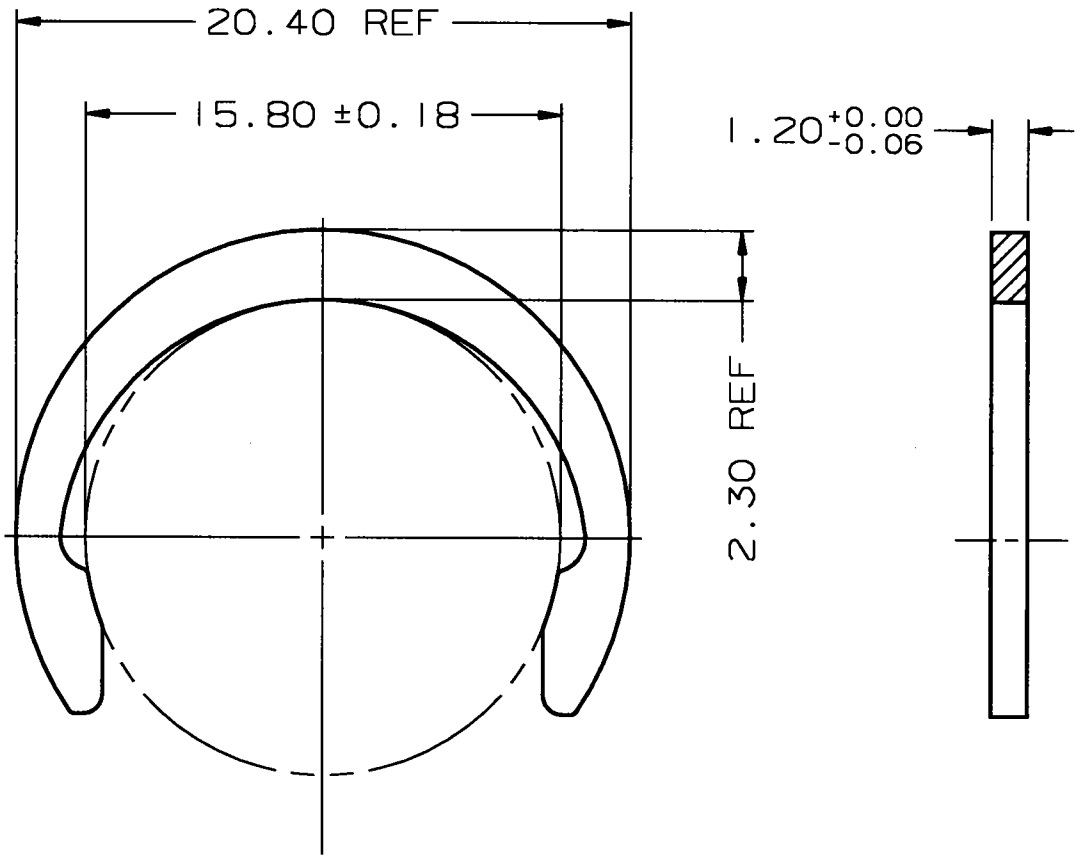

SHAFT DIA: 18
GROOVE DIA: 16.3 +0.00 -0.11
GROOVE WIDTH: 1.30 MIN
MAT'L: SAE 1060-1090, 66.5-70.0 HR30N

REV. NO.	DATE	REV. BY	ECN NUMBER

REVISION

WARNING: IF PRINTED, IT IS THE USERS RESPONSIBILITY TO CHECK THAT THIS DOCUMENT REFLECTS THE LATEST REVISION LEVEL.

TOLERANCES UNLESS OTHERWISE SPECIFIED: 3 PLACE DEC. 4 PLACE DEC. FRACT. ANGLES

MATERIAL	HEAT TREAT	FINISH	QTY. REQ'D.

THE CONTENTS OF THIS DRAWING IS THE PROPERTY OF ROTOR CLIP CO.INC. AND SHALL BE RETURNED TO ROTOR CLIP CO.INC. UPON REQUEST. ANY UNAUTHORIZED DISCLOSURE OF ITS CONTENTS WITHOUT THE PERMISSION OF ROTOR CLIP CO.INC. IS PROHIBITED.

ROTOR CLIP CO.,INC. ®

CUSTOMER DRAWING
DC-18

SCALE	DRAWN BY	DATE	FILE NAME:
4:1	GWF	071798	DC182

DWG. SIZE	DWG. NO.
A	DC-18-2